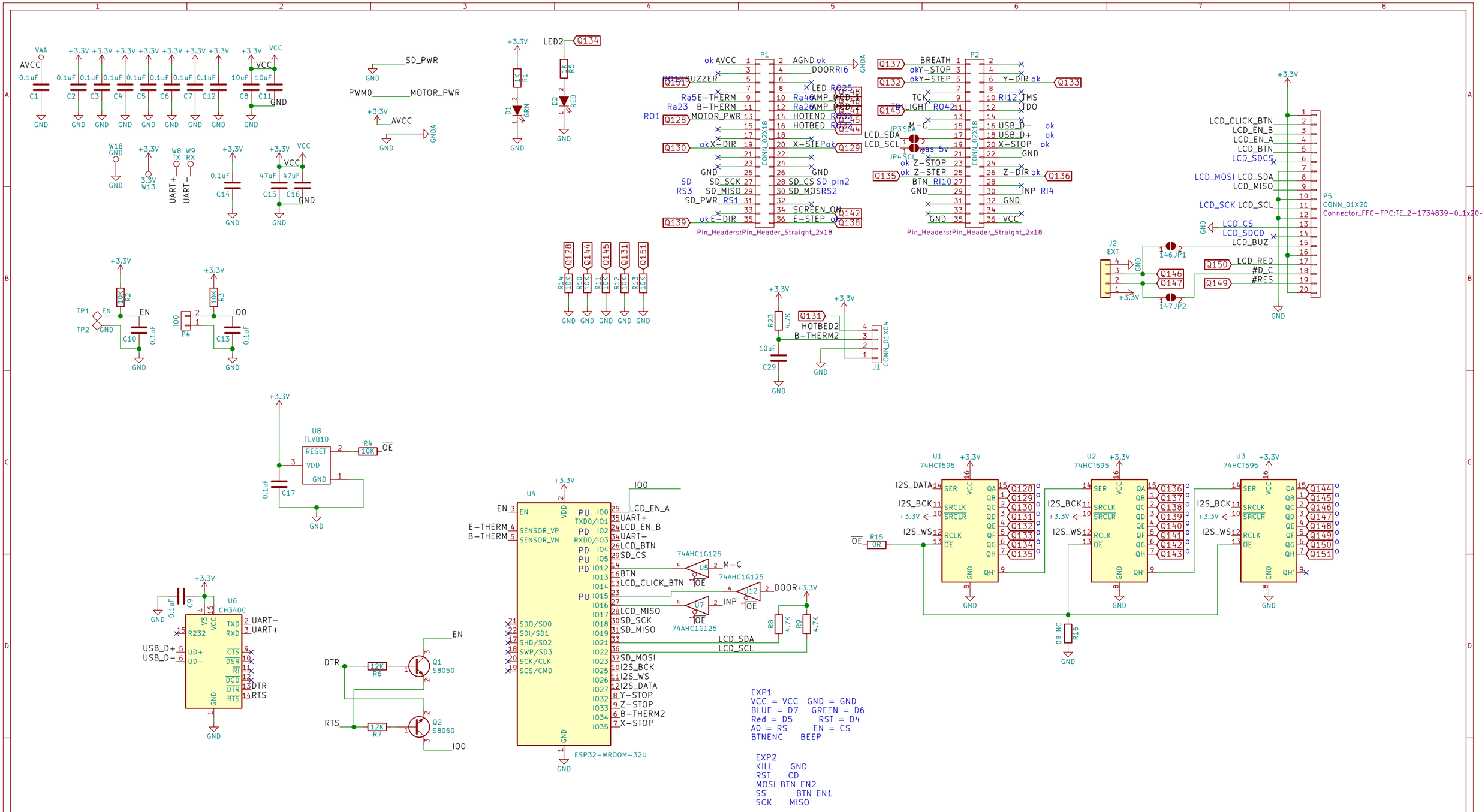


tinyFab.xyz

Sheet: /

File: up_cpu.sch

**Title: TFESPCPUV1_R2**

| | | |
|---|---|---|
| Size: A3 | Date: 2021-07-17 | Rev: 2 |
| KiCad E.D.A. kicad (5.1.9)-1 | | Id: 1/1 |